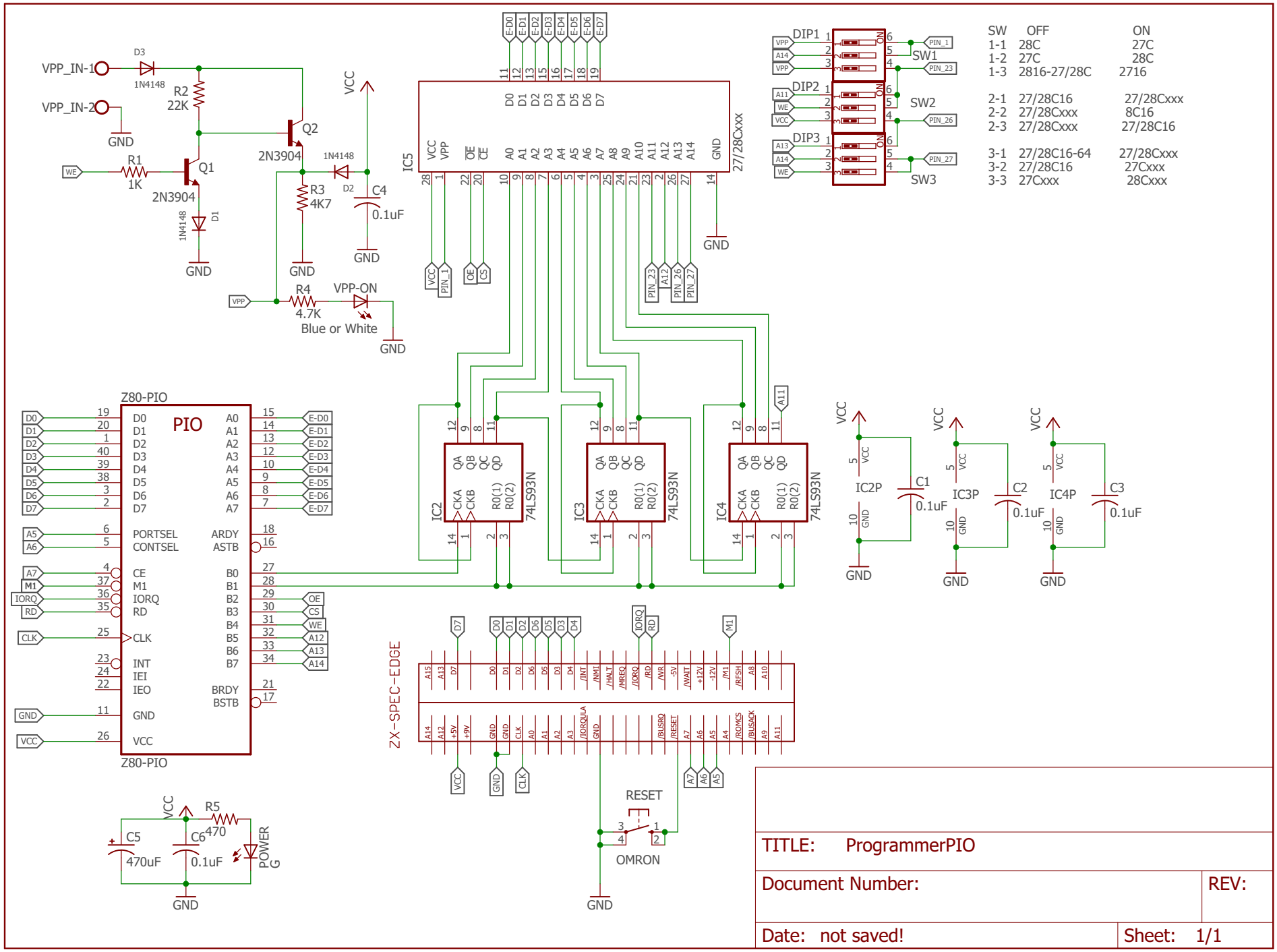
VPP_IN-1
VPP_IN-2
D3
1N4148
R2
22K
GND
Q2
2N3904
R1
1K
Q1
2N3904
1N4148
D1
GND
VCC
1N4148
D2
R3
4K7
C4
0.1uF
GND
GND
R4
4.7K
VPP-ON
Blue or White
GND
IC5
27/28Cxxx
GND
DIP1
DIP2
DIP3
SW1
SW2
SW3
SW OFF ON
1-1 28C 27C
1-2 27C 28C
1-3 2816-27/28C 2716
2-1 27/28C16 27/28Cxxx
2-2 27/28Cxxx 8C16
2-3 27/28Cxxx 27/28C16
3-1 27/28C16-64 27/28Cxxx
3-2 27/28C16 27Cxxx
3-3 27Cxxx 28Cxxx
Z80-PIO
PIO
Z80-PIO
IC2
IC3
IC4
74LS93N
IC2P
IC3P
IC4P
C1
0.1uF
C2
0.1uF
C3
0.1uF
ZX-SPEC-EDGE
RESET
OMRON
C5
470uF
C6
0.1uF
R5
470
POWER
G
TITLE: ProgrammerPIO
Document Number:
REV:
Date: not saved!
Sheet: 1/1